Distribution Pallet

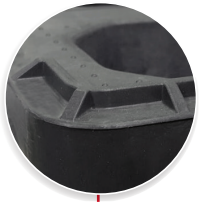

- 3 optional Safety Rims

- special feature allowing to band goods

- Rubber anti-slip gems

features and advantages

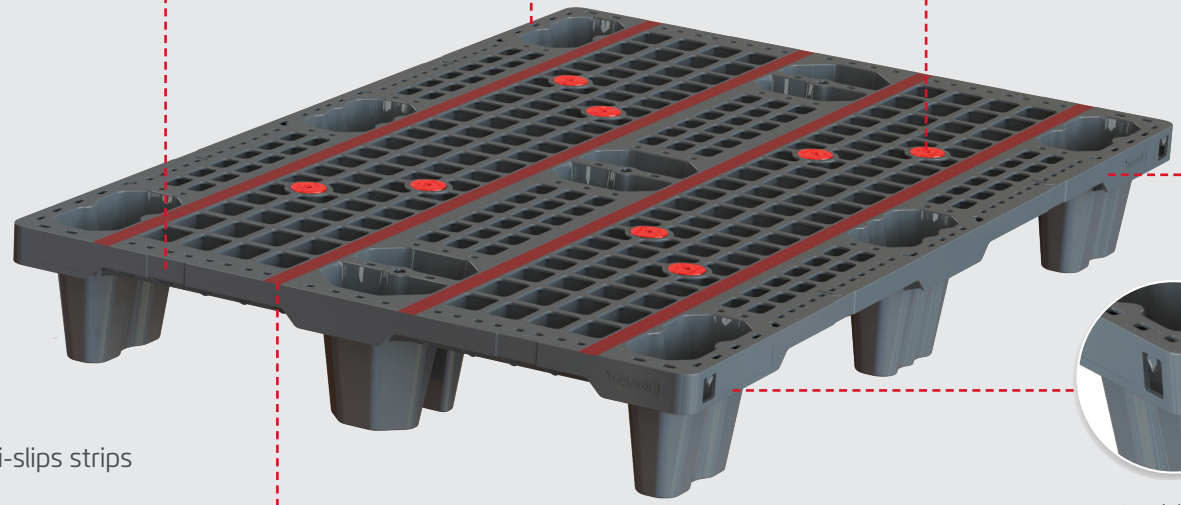

- bar code available for monitoring large fleets of pallets

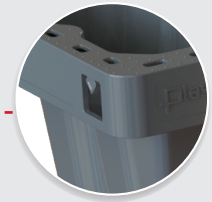

- Special feature design to enable secure wrapping of goods

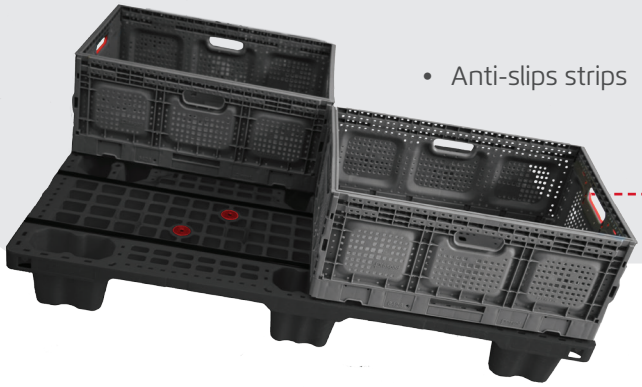

- Anti-slips strips

- Multi trip pallet
- Easy forklift entries when nested
- Environmentally friendly - 100% recyclable
- Skids (Optional)
- Excellent design for better support of any type of goods and/or crates
- Easy to wash and clean
- Closed deck (optional)

Plasgad®
Advanced Logistic Solutions

Specifications

MODEL	1200X800		1200X800 S		1200X1000		1200X1000 3S		1200X1000 5S		1200X1000 6S	
Catalog Number	DIDSE		DADSE		DIDSI		DADSI		DADSI		DADSI	
DIMENSIONS												
External Dimensions (L / W / H)	1200 / 800 / 150 mm 47.24 / 31.49 / 5.90 in		1200 / 800 / 162 mm 47.24 / 31.49 / 6.30 in		1200 / 1000 / 150 mm 47.24 / 39.37 / 5.90 in		1200 / 1000 / 162 mm 47.24 / 39.37 / 6.30 in		1200 / 1000 / 162 mm 47.24 / 39.37 / 6.30 in		1200 / 1000 / 162 mm 47.24 / 39.37 / 6.30 in	
LOGISTICS												
Weight	8.5 kg	18.74 Lb	11.16 kg	24.6 Lb	10.8 kg	21.81 Lb	14.46 kg	31.87 Lb	15.53 kg	34.23 Lb	16.02 kg	35.31 Lb
Weight CD	9.60 kg	21.16 Lb	12.26 kg	27.03 Lb	11.84 kg	26.10 Lb	15.50 kg	34.17 Lb	16.57 kg	36.53 Lb	17.06 kg	37.61 Lb
Dynamic	1000 kg	2204 Lb	1000 kg	2204 Lb	1000 kg	2204 Lb	1000 kg	2204 Lb	1000 kg	2204 Lb	1000 kg	2204 Lb
static	3000 kg	6613.8 Lb	3000 kg	6613.8 Lb	3000 kg	6613.8 Lb	3000 kg	6613.8 Lb	3000 kg	6613.8 Lb	3000 kg	6613.8 Lb
Racking			500 kg	1102.3 Lb			500 kg	1102.3 Lb	500 kg	1102.3 Lb	500 kg	1102.3 Lb
Pallets per stack	49		40		49		40		34		34	
Units per 40HC	1225		1000 (sets)		1029		840 (sets)		714 (sets)		714 (sets)	
MATERIAL												
Material	PP/HDPE recycled or virgin											
Color	Black (recycled)											

Technical Drawing (mm)

(1200X800)

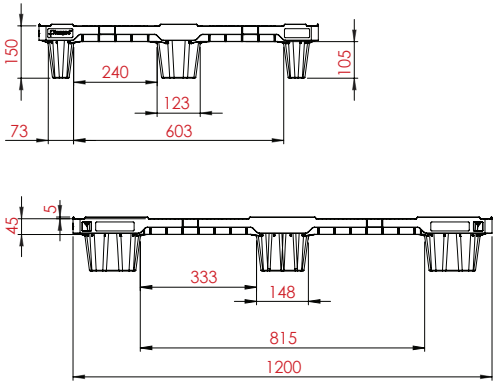

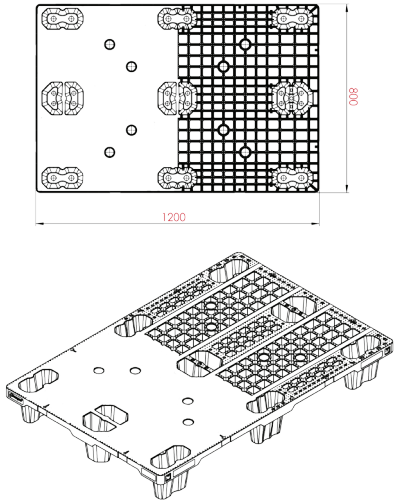

(1200X1000)

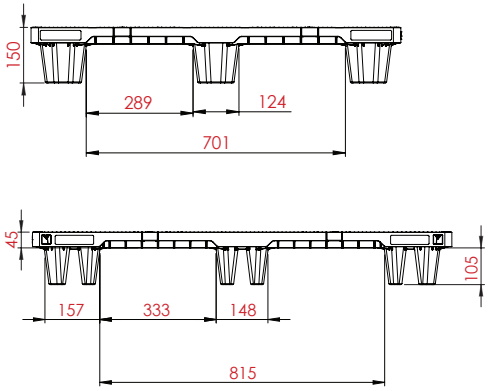

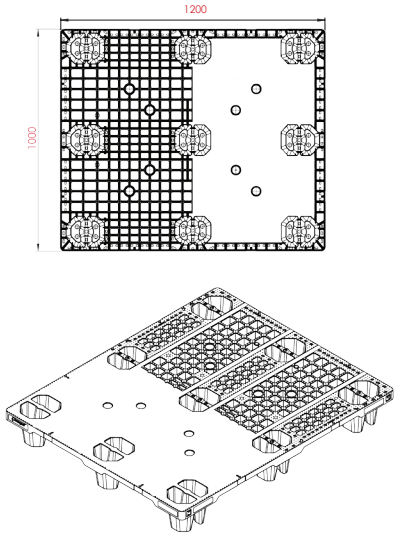

Plasgad®
Advanced Logistic Solutions

PL-E-P-0097-10/2016